sq_select_list :

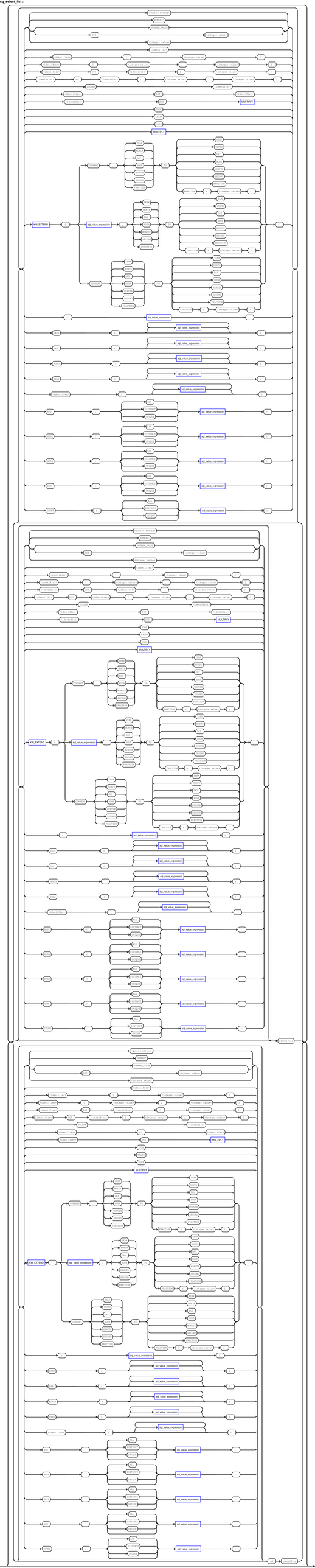
quoted string
NUMBER
BIND_VAR
AS
integer value
identifier
SUM
MULTIPLY
FOR_EXTEND
sql_value_expression
MAX
MIN
AVG
COUNT
STDDEV
VARIP
VARSP
STDDEVP
STDDEVSP
MEDIAN
FRACTION
OVER
PARTITION
BY
ORDER
ASC
DESC
NULLS
FIRST
LAST
ROWS
RANGE
UNBOUNDED
PRECEDING
CURRENT
FOLLOWING
WITHIN
GROUP
DISTINCT
NVL
NVL2
DECODE
CASE
WHEN
THEN
ELSE
END
CAST
MULTISET
CURSOR
CONCAT
SUBSTR
TRANSLATE
TO_CHAR
TO_DATE
TO_NUMBER
TRUNC
ROUND
RTRIM
LTRIM
LOWER
UPPER
INSTR
LENGTH
SYSDATE
SYSTIMESTAMP
NEXT_DAY
ADD_MONTHS
MONTHS_BETWEEN
LAST_DAY