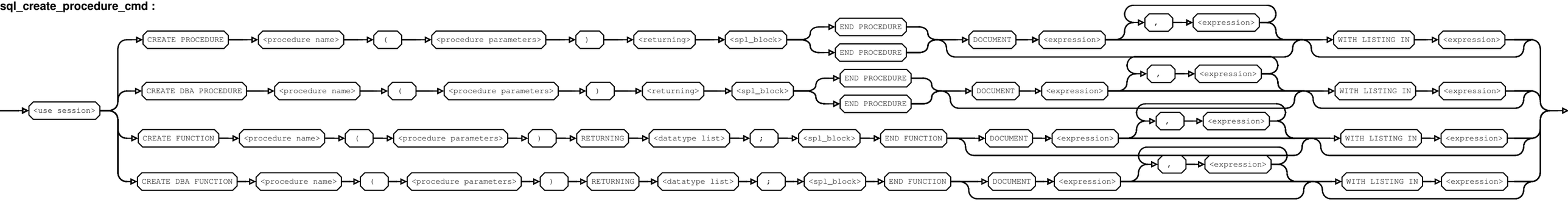sql_create_procedure_cmd :